MODULVENT AUTO

MORE TUTORIALS MODULVENT



The Modulvent Auto is **the most flexible self-regulating MEV** in its category. Designed to renew the air in **dwellings with up to 4 wet rooms**, its compact unit fits easily in **attics**, **suspended ceilings**, or **narrow utility areas**. Its 7 Ø125 mm branch connections, convertible to Ø80 mm, provide **ultra-flexible installation**.

STRENGTHS

> **Quick and flexible installation** with its compact unit and modular branch connections

> **Easy maintenance** with its patented detachable motor plate

> **Ultra-quiet operation:** below 15 dB(A) at 2 m from the kitchen vent on low speed

Description	Ref. no.
Modulvent Auto	304.0007
Modulvent auto with vents	304.0001

UP TO 249 m³/h — LESS THAN 15 dB(A) — 5-year guarantee

DESCRIPTION

- Ultra-slim ABS unit (93% recycled material) with 4 anti-vibration mounting brackets. Installation in attics, suspended ceilings, or narrow utility areas; can be suspended or fitted in any position (floor, wall, or ceiling).
- 7 Ø125 mm branch connections, convertible to Ø125 or Ø80 mm using interlocking, airtight adapters compatible with flexible, semi-rigid, or rigid ducts:
  - 2 Ø80 mm adapters included for bathroom/toilet
  - 1 Ø125 mm adapter included for kitchen
- 1 Ø160 mm branch connection with plug-fit adapter included, for exhaust
- 3 airflow regulators included:
  - 1 Ø80 mm regulator for toilet, airflow 15 m³/h
  - 1 Ø80 mm regulator for bathroom, airflow 30 m³/h
  - 1 Ø125 mm regulator for kitchen
- Push-in terminal block for tool-free electrical connection
- AC type motor, 2 speeds. Mounted on a patented detachable motor plate, tool-free, for easy maintenance and extended service life.
- 2 ventilation modes: low speed and high speed, activatable via a wired switch in the kitchen, available as an option

TECHNICAL DATA

- Maximum airflow - ErP: 249 m³/h
- Type of housing: T1 to T7 up to 4 wet rooms
- Motor power at maximum airflow - ErP: < 30 W
- Voltage: Single-phase 230 V - 50 Hz
- Module rating: IPX2
- Maximum operating temperatures: -20°C / 60°C

DIMENSIONS

Weight: 3.8 kg

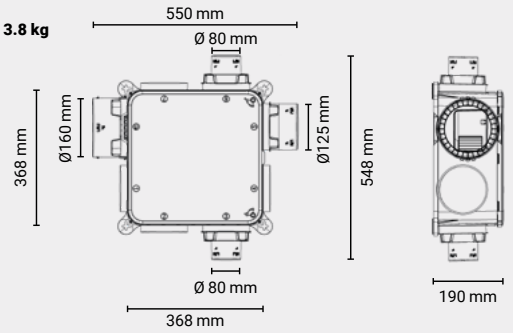



Compatible with VMI® Link Plan

EXAMPLE OF A STANDARD SETUP

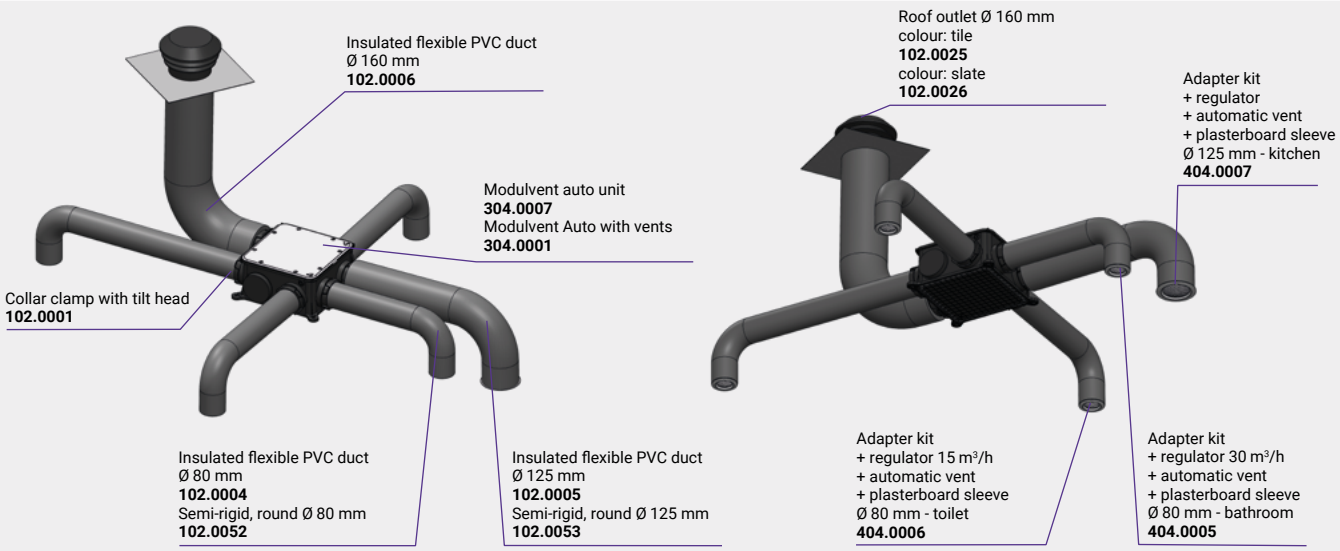

PERFORMANCE

Sound pressure at 2 m from the kitchen vent on low speed in dB(A) (1)	Sound power ErP in dB(A)
<15 dB(A)	46

(1) Measured in a semi-anechoic chamber, with hemispherical sound propagation

Average daily consumption (T4 - 1 bathroom + 1 toilet) in W -Th-C	Power on low speed in W	Power on high speed in W
15.4	15	25.6

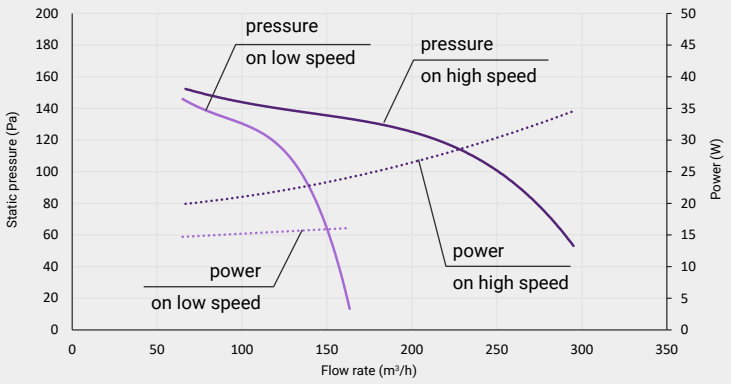

BOX CONTENTS

Description	Modulvent Auto	Modulvent Auto with vents
Ref. no.	304.0007	304.0001
Modulvent Auto unit	1	1
Adapter Ø 80 mm	2	2
Adapter Ø 125 mm	1	1
Adapter Ø 160 mm	1	1
Regulator 15 m³/h Ø 80 mm - toilet	1	1
Regulator 30 m³/h Ø 80 mm - bathroom	1	1
Regulator Ø 125 mm - kitchen	1	1
Plug Ø 125 mm	4	4
Ceiling mounting kit	1	1
Automatic vent + plasterboard sleeve Ø 80 mm - bathroom / toilet		2
Automatic vent + plasterboard sleeve Ø 125 mm - kitchen		1

ACCESSORIES

Description	Ref. no.
Wired switch	105.0023
Adapter kit + regulator 15 m³/h + automatic vent + plasterboard sleeve Ø 80 mm - toilet	404.0006
Adapter kit + regulator 30 m³/h + automatic vent + plasterboard sleeve Ø 80 mm - bathroom	404.0005
Adapter kit + regulator + automatic vent + plasterboard sleeve Ø 125 mm - kitchen	404.0007

MEMO

To complete the installation, don't forget the self-regulating air outlets, the 2A circuit breaker, the power cable,, etc.

VMI® and VENTILAIRSEC are trademarks registered by VENTILAIRSEC SAS.